Circular Connectors Supporting TÜV and MIL spec.

H/MS Series

■Features

1. Compatible with MIL spec. standard products

2. A ground circuit is provided in the TÜV approved connectors

3. Waterproof

The mated plug/receptacle combinations and un-mated receptacles are compliant to IP67F and IP68F ratings.
IP67 : Left in water at a depth of 1 m for 30 minutes
IP68 : Left in water at a depth of 2 m for 14 days

■Product Specifications

●Standard products

Ratings	Shell size	10SL		18	20		22		
	Contact arrangement	4	3	10	15	29	14	22	23
	Number of contacts	2	3	4	7	17	19	4	8
	Rated current (A)/contact The figure in [ ] indicates the total capacity of the connector.	13 [24.5]	13 [34.5]	23 [76.2]	23 [105.7]	13 [44.2]	13A [49.4]	46 [152.5]	23 [100.4]
	Rated voltage	AC500V DC700V							
	Operation temperature range	-40 to +125℃							
	Storage temperature range	-10 to +60℃							

●TÜV approved products

Ratings	Shell size	10SL			18				22						24	
	Contact arrangement	3			10				22						10	
	Number of contacts	3			4				4						7	
	Rated current (A)/contact	7	10	13	17	23	17	23	23	35	46	23	35	46	23	35
	Wire size (mm^2)	0.5	0.75	1.25	2	3.5	2	3.5	3.5	5.5	8	3.5	5.5	8	3.5	5.5
	Rated voltage (V)	200			500		250		500			250			250	
	Degree of pollution	3			2		3		2			3			2	
	Conducting voltage category	Ⅲ			Ⅱ		Ⅲ		Ⅱ			Ⅲ			Ⅱ	
	Operation temperature range	-40 to +125℃														
	Storage temperature range	-10 to +60℃														

Items	Specifications	Conditions
1. Contact resistance	10SL, 20-29, 22-14 : 5mΩ max. 18-10, 20-15, 22-23 : 3mΩ max. 22-22, 24-10 : 1mΩ max.	Measured at DC 1A
2. Insulation resistance	5000MΩ min.	Measured at DC 500V
3. Withstanding voltage	No flashover or dielectric breakdown	TÜV approved products : AC 2250V for 1 minute. Standard products : See the table of contact arrangement and electrical performance.
4. Vibration Resistance	No electrical discontinuity for 10μs min.	10 to 500Hz/cycle, full amplitude : 0.75mm, with 98 m/s^2, 3 directions, 3 hours each 10 to 500Hz/cycle, full amplitude : 0.75mm, with 98 m/s^2, 3 axis directions, 3 hours each
5. Shock resistance	No electrical discontinuity for 10μs min.	Acceleration : 490 m/s^2, duration : 11 ms, 3 axis directions, 3 cycles each
6. Mating Cycles	Contact resistance : Initial value x for 1.5mΩ max.	500 times
7. Temperature cycle	Insulation resistance: a minimum of 500MΩ	-55℃ : 30 minutes → Normal temperature : 10 to 15 minutes → 125℃ : 30 minutes → Normal temperature : 10 to 15 minutes, left for 5 cycles
8. Moisture resistance	Insulation resistance : a minimum of 50MΩ (at high humidity) min. 500MΩ (when dry) min.	Temperature : 71℃, relative humidity : 95%, left for 336 hours
9. Waterproof	No water penetration into the connector.	Left in water at a depth of 1m for 0.5 hours in the mated state.

Scheduled to be discontinued

Oct.1.2026 Copyright 2026 HIROSE ELECTRIC CO., LTD. All Rights Reserved.

■Materials / Finish

Material		Finish	Remarks
Shell	Aluminum alloy (Zinc alloy : H/MS3108B plug cord tube)	Black chromate treatment	————
Insulator	PPS resin, PBT resin, or silicone rubber	Black	UL94V-0 (Excluding silicone rubber)
Contact	Copper alloy	Silver plating	————
Bushing	Acrylonitrile-butadiene rubber (Chloroprene rubber : H/MS08A plug)	Black	————

■Product Number Structure

Refer to the chart below when determining the product specifications from the product number.
Please select from the product numbers listed in this catalog when placing orders.

● Plug and receptacle

H/MS 3102 A 18 - 10 P X - D - T (01)

❶ ❷ ❸ ❹ ❺ ❻ ❼ ❽ ❾ ⓫

● Clamp

H/MS 3057 - 4A (01)

❶ ❷ ❿ ⓫

❶Model name: H/MS Series.
❷Shape : Indicates the shape of the connector. 3102 : Receptacle 3106 : Straight plug 3108 : Right angle shaped plug 08 : Low-profile, right angle shaped plug 3057 : Cord clamp
❸Structure : Indicates the structure of the connector. A : Integrated shell B : Separated shell
❹Shell size : This is the diameter of the screw (inches) at the termination end multiplied by the constant of 16. (Example : The shell size of 18 is calculated by 1 1/8" x 16 = 18.)
❺Contact arrangement : See pages 10 and 11 for details on contact arrangement.
❻Contact form : Indicates the termination style. P : Soldered, male contact S : Soldered, female contact PC : Crimped, male contact SC : Crimped, female contact
❼Variations of insert position : The letters W, X, Y, or Z are used for any changes in the insert position from that of the standard type.
❽Ground contact number : Notes the grounded contact for TÜV approved products. The ground contact position corresponds to contacts C, D, or G, and varies depending on shell size. Part numbers without this symbol indicate that the part does not include a ground contact.
❾TÜV approved product : TÜV approved products that are compliant with DIN VDE 0627.
❿Clamp size : Indicates both clamp size and structure.
⓫Other specifications : A two-digit number such as (01) or (02) is added to indicate other specifications.

Scheduled to be discontinued

Oct.1.2026 Copyright 2026 HIROSE ELECTRIC CO., LTD. All Rights Reserved.

■Straight plug

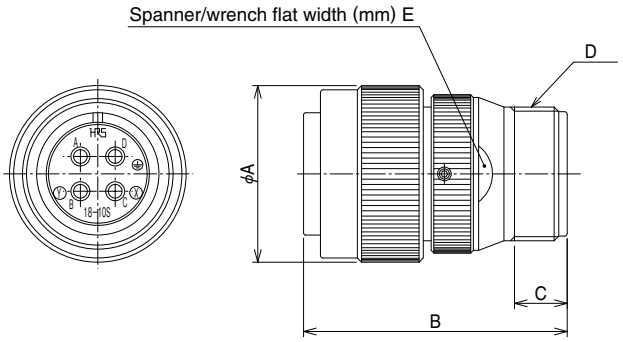

(Representative example)

●Standard products

Part No.	HRS No.	No. of contacts	ϕA	B	C	D	E
H/MS3106A10SL-4S(73)	120-0601-3 73	2	22	36.8	10	5/8-24UNEF-2A	—
H/MS3106A10SL-3S(73)	120-0603-9 73	3					
H/MS3106A18-10S(73)	120-0605-4 73	4	33.5	50		1-20UNEF-2A	27
H/MS3106A20-29S(73)	120-0611-7 73	17	37	54.5		1 3/16-18UNEF-2A	32
H/MS3106A20-29SW(77)	120-0611-7 77						
H/MS3106A22-14S(73)	120-0613-2 73	19	39.5				
H/MS3106A22-22S(73)	120-0615-8 73	4					

●TÜV approved products

Part No.	HRS No.	No. of contacts	ϕA	B	C	D	E
H/MS3106A10SL-3S-C-T(73)	120-0326-0 73	3	22	36.8	10	5/8-24UNEF-2A	—
H/MS3106A18-10S-D-T(73)	120-0323-2 73	4	33.5	50		1-20UNEF-2A	27
H/MS3106A22-22S-D-T(73)	120-0324-5 73		39.5	54.5		1 3/16-18UNEF-2A	32
H/MS3106A24-10S-G-T(73)	120-0325-8 73	7	43	57.7		1 7/16-18UNEF-2A	37

Scheduled to be discontinued

■Right-angled plug

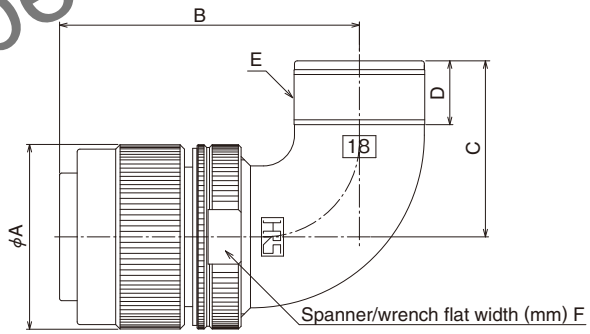

(Representative example)

●Standard products

Part No.	HRS No.	No. of contacts	ϕA	B	C	D	E	F
H/MS3108B10SL-4S(73)	120-0701-8 73	2	22	37.3	24.5	11.6	5/8-24UNEF-2A	20
H/MS3108B10SL-3S(73)	120-0703-3 73	3						
H/MS3108B18-10S(31)	120-0705-9 31	4	33.5	54.5	32		1-20UNEF-2A	32
H/MS3108B20-29S(31)	120-0711-1 31	17	37	60.7	34		1 3/16-18UNEF-2A	35
H/MS3108B20-29SW(34)	120-0711-1 34							
H/MS3108B22-14S(73)	120-0713-7 73	19	39.5					38
H/MS3108B22-22S(73)	120-0715-2 73	4						

●TÜV approved products

Part No.	HRS No.	No. of contacts	ϕA	B	C	D	E	F
H/MS3108B10SL-3S-C-T(73)	120-0421-1 73	3	22	37.3	24.5	11.6	5/8-24UNEF-2A	20
H/MS3108B18-10S-D-T(31)	120-0422-4 31	4	33.5	54.5	32		1-20UNEF-2A	32
H/MS3108B22-22S-D-T(31)	120-0423-7 31		39.5	60.7	34		1 3/16-18UNEF-2A	38
H/MS3108B24-10S-G-T(73)	120-0424-0 73	7	43	67.1	39.6		1 7/16-18UNEF-2A	41

(Note) With some models it may be difficult to push the cable through the connector, even when the cable is within the applicable range. Waterproof performance and cable clamp capability may differ depending on the cable specification. Please make sure all specifications are met before actual use.

Oct.1.2026 Copyright 2026 HIROSE ELECTRIC CO., LTD. All Rights Reserved.

■Low-profile, right-angled plug (with cord clamp)

H/MS08A18-10S-DT10D(73)

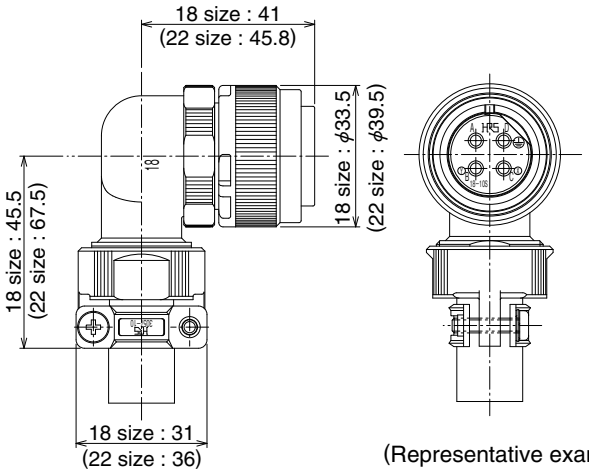

(Representative example)

●TÜV approved products

Part No.	HRS No.	No. of contacts	Weight	Applicable cable diameter	Solder pot diameter
H/MS08A18-10S-DT10D(73)	120-0476-3 73	4	89g	ϕ12 ～ 14.3mm	ϕ2.3
H/MS08A18-10S-DT10D1(73)	120-0481-3 73			ϕ10 ～ 12.5mm	
H/MS08A22-22S-DT12D(73)	120-0477-6 73		127g	ϕ13 ～ 15.9mm	ϕ4.5

Scheduled to be discontinued

Oct.1.2026 Copyright 2026 HIROSE ELECTRIC CO., LTD. All Rights Reserved.

■Single block (waterproof)

This connector is designed for use with flexible conduit or cabtire cable connectors.(See page 8 for the table of compatibilities for H/MS connectors and other connectors.)

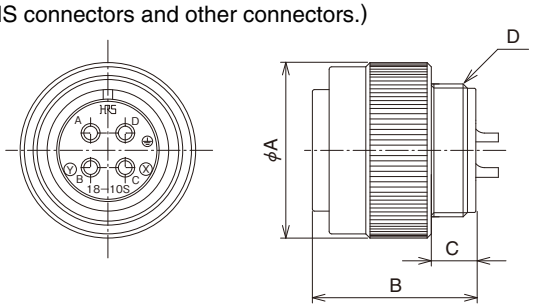

(Representative example)

●Standard products

Part No.	HRS No.	No. of contacts	ϕA	B	C	D
H/MS3106A10SL-3S(76)	120-0603-9 76	3	22	24	6.5	9/16-24UNEF-2A
H/MS3106A18-10S(76)	120-0605-4 76	4	33.5	31.2	8	1-20UNEF-2A

●TÜV approved products

Part No.	HRS No.	No. of contacts	ϕA	B	C	D
H/MS3106A18-10S-D-T(76)	120-0323-2 76	4	33.5	31.2	8	1-20UNEF-2A
H/MS3106A22-22S-D-T(76)	120-0324-5 76		39.5	33.2	10	1 1/4-18UNEF-2A

■Receptacle (solder type)

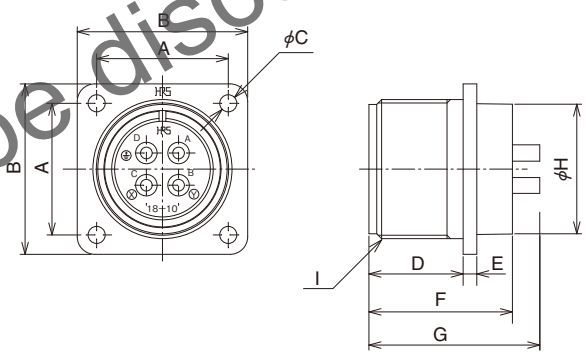

(Representative example)

●Standard products

Part No.	HRS No.	No. of contacts	A	B	ϕC	D	E	F	G	ϕH	I
H/MS3102A10SL-4P(73)	120-0111-4 73	2	18.26	25.4	3.3	14.5	2.2	23.6	28.3	15.6	5/8-24UNEF-2A
H/MS3102A10SL-3P(73)	120-0113-0 73	3									
H/MS3102A18-10P(73)	120-0101-0 73	4	26.97	34.92		19.3	2.8	30	35	26.6	1 1/8-18UNEF-2A
H/MS3102A20-15P(73)	120-0115-5 73	7	29.36	38.1				29.4	33	29.6	1 1/4-18UNEF-2A
H/MS3102A20-29P(73)	120-0103-6 73	17									
H/MS3102A20-29PW(74)	120-0103-6 74										
H/MS3102A22-22P(73)	120-0107-7 73	4	31.75	41.28					38	32.6	1 3/8-18UNEF-2A

●TÜV approved products

Part No.	HRS No.	No. of contacts	A	B	ϕC	D	E	F	G	ϕH	I
H/MS3102A10SL-3P-C-T(73)	120-0231-6 73	3	18.26	25.4	3.3	14.5	2.2	23.6	28.3	15.6	5/8-24UNEF-2A
H/MS3102A18-10P-D-T1(73)	120-0259-5 73	4	26.97	34.92		19.3	2.8	30	35	26.6	1 1/8-18UNEF-2A
H/MS3102A22-22P-D-T(73)	120-0227-9 73		31.75	41.28				29.4	38	32.6	1 3/8-18UNEF-2A
H/MS3102A24-10P-G-T(73)	120-0228-1 73	7	34.92	44.45	3.75	21		31.6	41	36	1 1/2-18UNEF-2A

Scheduled to be discontinued

Oct.1.2026 Copyright 2026 HIROSE ELECTRIC CO., LTD. All Rights Reserved.

●Receptacle (crimp type)

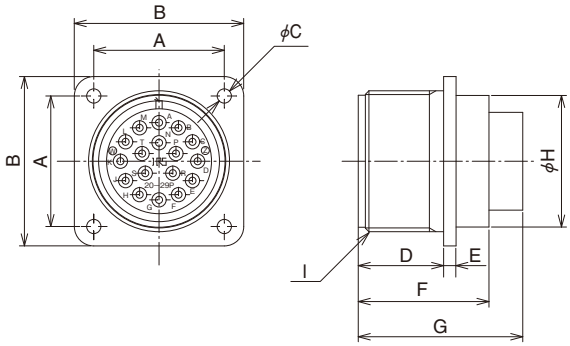

(Representative example)

●Standard products

Part No.	HRS No.	No. of contacts	A	B	ϕC	D	E	F	G	ϕH	I
H/MS3102A20-29PC(73)	120-0501-9 73	17	29.36	38.1	3.3	19.3	2.8	29.4	37	29.6	1 1/4-18UNEF-2A
H/MS3102A22-14PC(73)	120-0502-1 73	19	31.75	41.28						32.6	1 3/8-18UNEF-2A

Scheduled to be discontinued

◆Contact

●Male contact

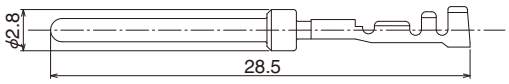

Type	Part No.	HRS No.	Applicable wire size
Reel contacts	H/MS-PC1-212	120-0533-5	AWG#24 ～ 28
Loose piece contacts	H/MS-PC1-112	120-0534-8	

(Note) Reel contacts are packaged 7,000 pcs/reel. Loose piece contacts are packaged 100 pcs/pack.

◆Receptacle mounting method

When installing a waterproof receptacle, please insert the appropriate O-ring (to be placed between the receptacle and panel), as shown in the figure on the right.

Recommended O-ring dimensions.

Part No.	ϕA	Inner diameter of O-ring (ϕ)	Thickness of O-ring (ϕ)
H/MS3102A10SL-**	17.5	17.5	1.5
H/MS3102A18-**	28.5	28.5	2
H/MS3102A20-**	31.5	31.5	
H/MS3102A22-**	34.5	34.5	
H/MS3102A-24 **	37.8	37.5	

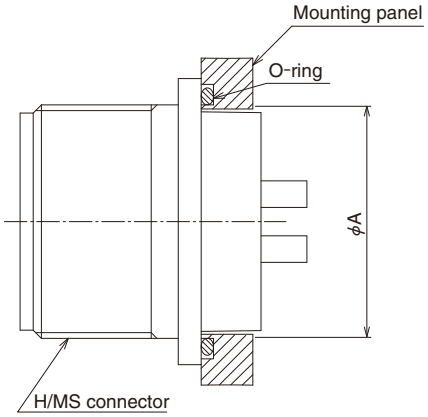

Oct.1.2026 Copyright 2026 HIROSE ELECTRIC CO., LTD. All Rights Reserved.

■Cord clamp

H/MS3057-10A(31)

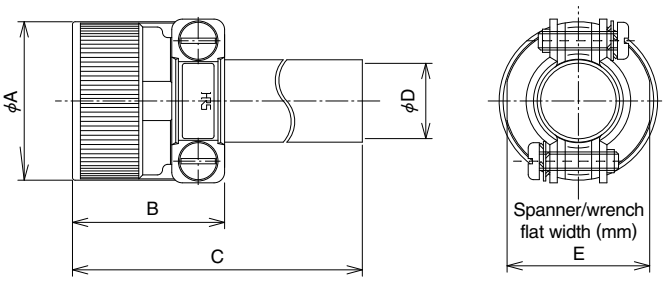

(Representative example)

●Waterproof type

Part No.	HRS No.	φA	B	C	φD	E	Range of applicable cable diameters (reference)	Applicable shell size
H/MS3057-4A(73)	120-0801-2 73	20	26.8	83.8	5.6	17	φ3.1～5.6	10SL
H/MS3057-10A(31)	120-0802-5 31	30	28.8	72.8	14.3	27	φ10.3～14.3	18
H/MS3057-12A(31)	120-0803-8 31	34	29.8	70.8	15.9	30	φ11.4～15.9	20.22
H/MS3057-16A(73)	120-0804-0 73	40	33.8	69.3	19	36	φ14～19	24

(Remarks) For various cable diameters, clamping force and waterproof performance may differ depending on the cable type selected. Please make sure all specifications are met before assembly.

Scheduled to be discontinued

◆Applicable tools

Type	Item	Part No.	HRS No.	Applicable contact	Applicable wire size
Manual	Manual crimping tool	H/MS/CC-HT	150-0206-0	H/MS-PC1-112	AWG#24～28
Auto	Automatic crimping press	CM-105C	901-0001-0	————	————
	Applicator	AP105-H/MS-PC1-1	901-2027-8	H/MS-PC1-212	AWG#24～28
Extraction tool		H/MS-TP	150-0076-7	H/MS-PC1-112 H/MS-PC1-212	————

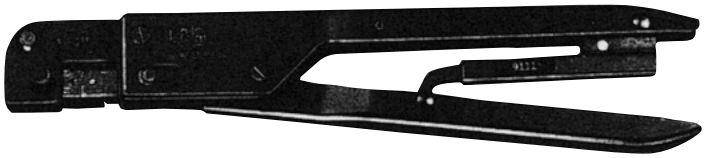

Manual crimping tool

Extraction tool

Automatic crimping press (CM-105C)

Oct.1.2026 Copyright 2026 HIROSE ELECTRIC CO., LTD. All Rights Reserved.

◆Connector combinations

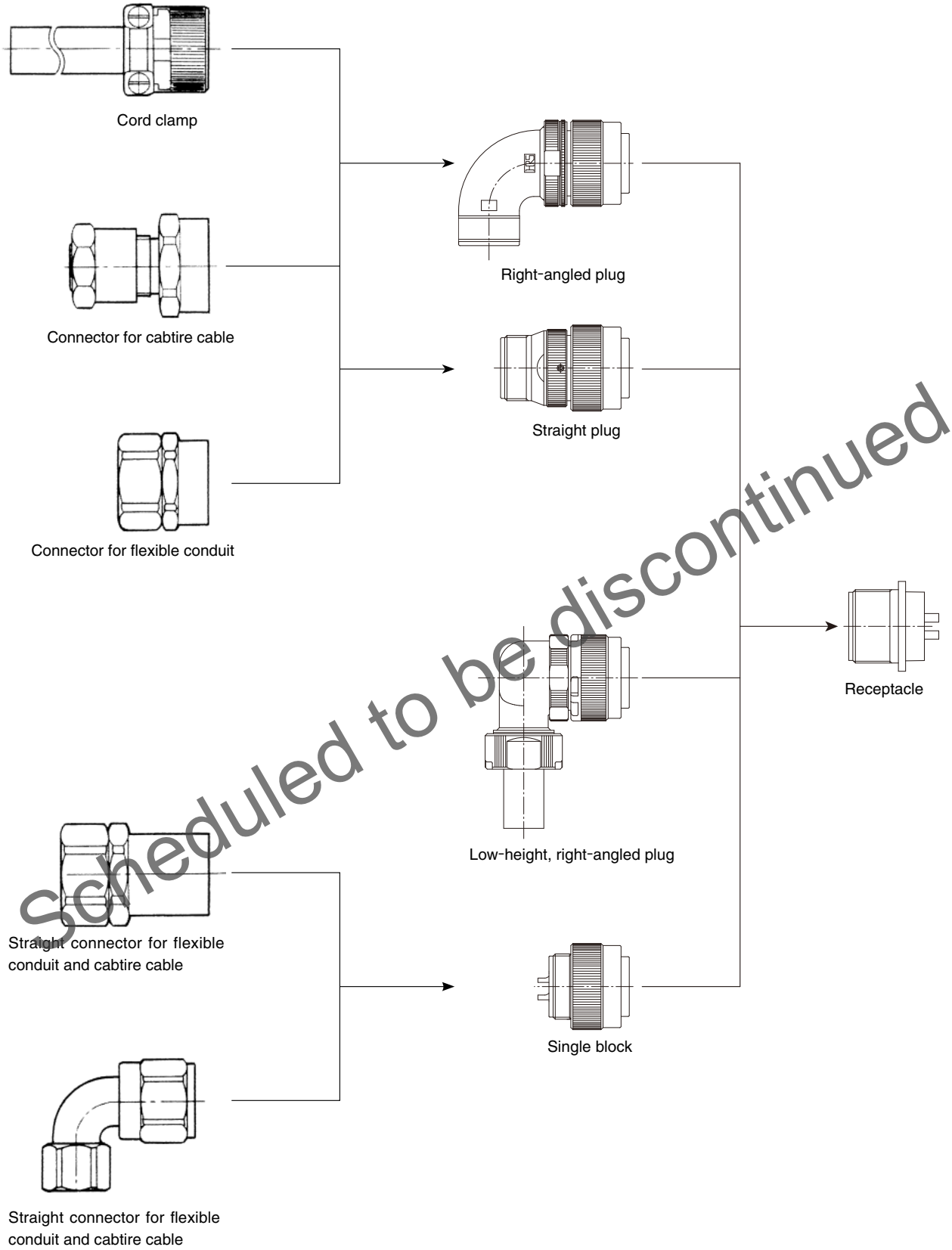

Scheduled to be discontinued

(Remarks) 1. Illustration represents connectors for flexible conduit and cabtire cable as a reference example.
2. The standard and TÜV approved products are compatible with each other.
When using the TÜV approved products for TÜV applications, make sure to use both TÜV approved plugs and receptacles together.

Oct.1.2026 Copyright 2026 HIROSE ELECTRIC CO., LTD. All Rights Reserved.

◆Table of compatibilities for H/MS connectors and the connectors for conduit and cabtire cable

●Connectors for flexible conduit

H/MS connector Part No.	Part number by Nippon Flex Co., Ltd.		Part number by Daiwa Dengyo Co., Ltd.	
	Straight type	Right angle type	Straight type	Right angle type
H/MS3106A10SL-□□(73)	RCC10*CA12 (with O-ring)	——	NBDC 12S** (with O-ring)	——
H/MS3108B10SL-□□(73)	RCC10*CA12		NBDC 12S**	
H/MS3106A10SL-□□(76)	RCC10*RL-MS10F	RCC-30*RL-MS10F	BOS 10*	BOL 10*
H/MS3106A18-□□(73)	RCC10*CA18 (with O-ring)	——	NBDC 18** (with O-ring)	——
H/MS3108B18-□□(73)	RCC10*CA18		NBDC 18**	
H/MS3106A18-□□(76)	RCC10*RL-MS18F	RCC-30*RL-MS18F	BOS 18**	BOL 18**
H/MS3106A20-□□(73)	RCC10*CA2022 (with O-ring)	——	NBDC 20(22)** (with O-ring)	——
H/MS3106B20-□□(73)	RCC10*CA2022		NBDC 20(22)**	
H/MS3106A20-□□(76)	RCC10*RL-MS20F	RCC-30*RL-MS20F	BOS 22**	BOL 20**
H/MS3106A22-□□(73)	RCC10*CA2022 (with O-ring)	——	NBDC 20(22)** (with O-ring)	——
H/MS3108B22-□□(73)	RCC10*CA2022		NBDC 20(22)	
H/MS3106A22-□□(76)	RCC10*RL-MS22F	RCC-30*RL-MS22F	BOS 22**	BOL 22**
H/MS3106A24-□□(73)	CC10*CA2428 (with O-ring)	——	NBDC 24** (with O-ring)	——
H/MS3108B24-□□(73)	RCC10*CA2428		NBDC 24**	
H/MS3106A24-□□(76)	RCC10*RL-M524F	RCC-30*RL-MS24F	BOS 24**	BOL 24**

●Connectors for cabtire cable

H/MS connector Part No.	Part number by Nippon Flex Co., Ltd.		Part number by Daiwa Dengyo Co., Ltd.	
	Straight type	Right angle type	Straight type	Right angle type
H/MS3106A-10SL□□(73)	——	——	YDC 12S* (with O-ring)	——
H/MS3108B-10SL□□(73)			YDC 12S*	
H/MS3106A-10SL□□(76)	ACS**RL-MS10F	ACA**RL-MS10F	YDO 10*	YLO 10*
H/MS3106A18-□□(73)	ACS**CA18	——	YDC 18** (with O-ring)	——
H/MS3108B18-□□(73)			YDC 18**	
H/MS3106A18-□□(76)	ACS**RL-MS18F	ACA**RL-MS18F	YDO 18**	YLO 18*
H/MS3106A20-□□(73)	ACS**CA2022	——	YDO 20(22)** (with O-ring)	——
H/MS3106B20-□□(73)			YDC 20(22)**	
H/MS3106A20-□□(76)	ACS**RL-MS20F	ACA**RL-MS20F	YDC 20**	YLO 20*
H/MS3106A22-□□(73)	ACS**CA2022	——	YDC 20(22)** (with O-ring)	——
H/MS3108B22-□□(73)			YDC 20(22)**	
H/MS3106A22-□□(76)	ACS**RL-MS22F	ACA**RL-MS22F	YDO 22**	YLO 22*
H/MS3106A24-□□(73)	ACS**CA2428	——	YDC 24** (with O-ring)	——
H/MS3108B24-□□(73)			YDC 24**	
H/MS3106A24-□□(76)	ACS**RL-MS24F	ACA**RL-MS24F	YDO 24**	YLO 24*

(Remarks) 1. □□ : Indicates contact arrangement/count.
2. ** : The values differ depending on the cable used.

Scheduled to be discontinued

Oct.1.2026 Copyright 2026 HIROSE ELECTRIC CO., LTD. All Rights Reserved.

◆Contact arrangement and electrical performance

Shell size	10SL		18	20	
	4	3	10	15	29
Contact arrangement	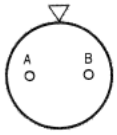	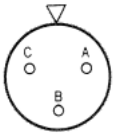	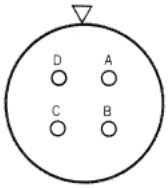	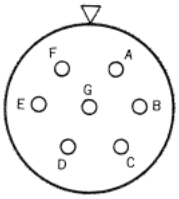	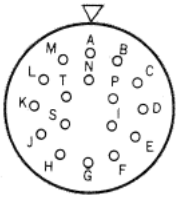
Number of contacts	2	3	4	7	17
Withstanding voltage	AC 1,000V for 1minute		AC 2,000V for 1minute		
Current capacity	13A(24.5A)	13A(34.5A)	23A(76.2A)	23A(105.7A)	13A(44.2A)
Insulation resistance	5,000MΩ min. at 500V DC				
Contact resistance	5mΩ max.		3mΩ max.		5mΩ max.
Inner diameter of solder pot	ϕ1.8		ϕ2.9		ϕ1.8
Preliminary soldering	Not necessary		Needed		Not necessary

Shell size	22		
	14	22	23
Contact arrangement	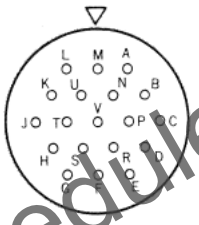	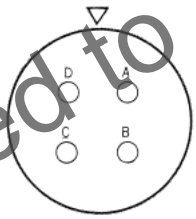	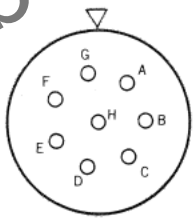
Number of contacts	19	4	8
Withstanding voltage	AC 2,000V for 1minute		
Current capacity	13A(49.4A)	46A(152.5A)	23A(100.4A)
Insulation resistance	5,000MΩ min. at 500V DC		
Contact resistance	5mΩ max.	1mΩ max.	3mΩ max.
Inner diameter of solder pot	ϕ1.8	ϕ5.3	ϕ2.9
Preliminary soldering	Not necessary	Needed	

Scheduled to be discontinued

Remarks

1. Figure shows the receptacle contact arrangement as viewed from the interface mating side (plug's socket insert side).
2. Withstanding voltages are derived from test voltages
3. Current capacities are shown in a value per contact. The number in ( ) indicates the connector's total capacity.
4. Contact resistances are shown in a value when measured at DC 1 A.
5. Please contact us for more information.

Oct.1.2026 Copyright 2026 HIROSE ELECTRIC CO., LTD. All Rights Reserved.

◆Major specifications of TÜV approved products

●Applicable German standard: DIN VDE0627 (connector)

Shell size	10SL			18				22						24	
Contact arrangement	3			10				22						10	
	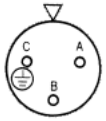			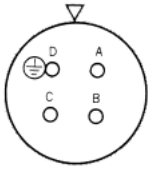				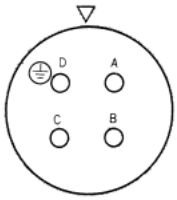						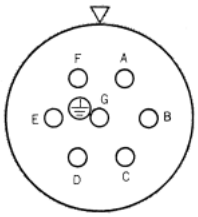	
Number of contacts	3			4				4						7	
Ground contact No.	C			D				D						G	
AC/DC rated voltage (V)	200			500		250		500			250			250	
Rated current (A)	7	10	13	17	23	17	23	23	35	46	23	35	46	23	35
Wire size (mm^2)	0.5	0.75	1.25	2	3.5	2	3.5	3.5	5.5	8	3.5	5.5	8	3.5	5.5
Degree of Pollution	3			2		3		2			3			2	
Conducting voltage category	Ⅲ			Ⅱ		Ⅲ		Ⅱ			Ⅲ			Ⅱ	
Inner diameter of solder pot (mm)	ϕ1.8			ϕ2.6				ϕ4.5						Plug: ϕ3.6 Receptacle: ϕ5.3	

Remarks

1. Figure shows the receptacle contact arrangement as viewed from the interface mating side (plug's socket insert side).
2. Current capacities are shown in a value per contact.
3. The contact numbers with a mark " ◎ " have contacts that are grounded to the outer shell, except for receptacles that are size 24-10.
4. For the receptacles that are size 24-10, the ground contact (contact No.: G) does not ground with the outer shell. Please use these connectors after grounding the outer shell of the connector with the corresponding contact No.
5. The degree of pollution and conducting voltage categories refer to the environmental condition in which a DIN VDE0110 (insulation coordination for the electric appliances in a constant voltage facility) electric appliance is used, and to the class of over voltage in the electric appliance.
6. Performance values for other than those shown above are the same as those of the general H/MS series.

Scheduled to be discontinued

◆Usage Recommendations

(1) The power to the circuit should always be off before mating/unmating a connector.
(2) Always use a female connector for the power side of the circuit; this will prevent the likelihood of electric shocks.
(3) Be sure to fully tighten the lock mechanism of the connectors.
(4) Connector performance features such as cable clamping force, cable rotation force, or waterproof performance may differ depending on the cable construction. Please make sure all specifications are met before assembly.
(5) This product uses silver-plated contacts. Please be aware that silver easily reacts to sulfur gases, causing discoloration or degradation when exposed to certain environmental conditions as shown below. These conditions include areas with:
- A large amount of dust and dirt
- High density of sulfur dioxide gas, hydrogen sulfide gas, nitrogen dioxide gas, or other gas (Emission gases from vehicles and factories, etc.)
- Highly fluctuating temperatures, such as close to a heating apparatus
  In addition, it is recommended to store the products in their original packaging or similar state in order to prevent discoloration.
- Temperature: -10 to +60°C, relative humidity: 80% or lower (An environment where temperature and relative humidity are constant and there is less temperature difference is recommended.)
- Please use the products within six months after delivery.
  (For the products in which the storage period is expired, please confirm the ease of soldering for your application beforehand.)

Oct.1.2026 Copyright 2026 HIROSE ELECTRIC CO., LTD. All Rights Reserved.

(6) Please confirm the following information when routing the cable after assembling the crimp contacts into the crimp type connector.

①Do not apply a force of 20N or greater to the cable. Applying a force of 20N or more may result in breakage of the insulator inside the connector or contact failure resulting from contact disconnect.
②When routing, bend the cables at a curve in order to prevent a force to the crimped portion.
If the cable is bent directly at the edge of the connector and routed, the cables on the outer side will be pulled more than those on the inner side.
This may result in breakage of the insulator inside the connector or contact failure resulting from contact disconnect.

①Securing force of crimp contact

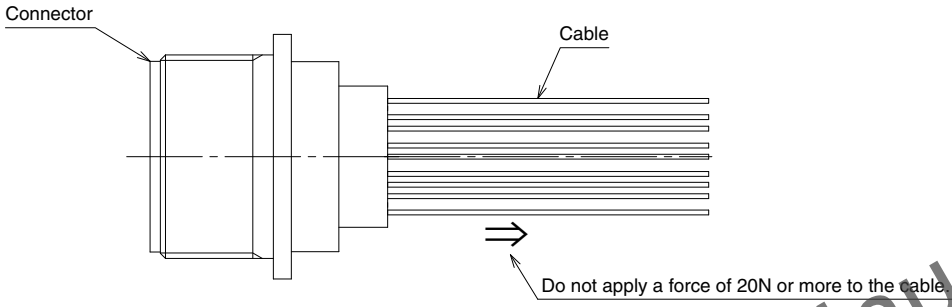

②Cable routing

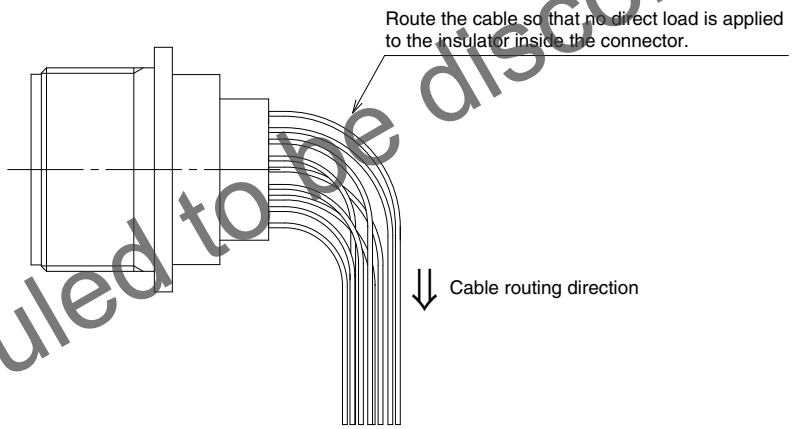

The cable cannot be directly bent at the edge of the connector during routing.

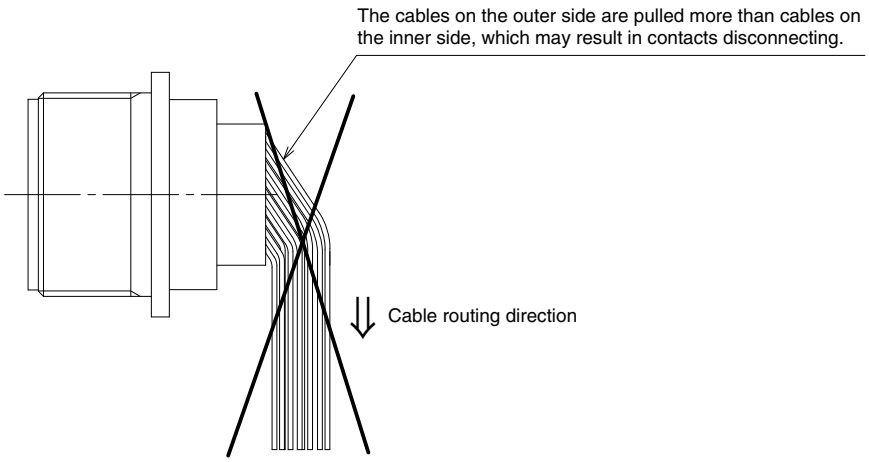

Scheduled to be discontinued

Oct.1.2026 Copyright 2026 HIROSE ELECTRIC CO., LTD. All Rights Reserved.

HIROSE ELECTRIC CO.,LTD.
2-6-3,Nakagawa Chuoh,Tsuzuki-Ku,Yokohama-Shi 224-8540,JAPAN
https://www.hirose.com/

The characteristics and the specifications contained herein are for reference purpose. Please refer to the latest customer drawings prior to use.
The contents of this catalog are current as of date of 10/2021. Contents are subject to change without notice for the purpose of improvements.